FINISHING YOUR OVEN: A FACADE TUTORIAL

VARIATION: MT. SERIES CYLINDER WALL

The illustrations below cover, what we call, a cylinder wall often referred to as a "Silo" type installation. This particular example uses a WS-MS-5-RFG-IR oven. Many details are applicable to all of our WS-MS ovens; some apply to WS-MS-RFG-IR ovens only.

This tutorial assumes you are working with out Curved Doorway and Lower Panel Extensions. These extensions are installed at the factory and make the installation process much easier. Be sure to view our Facade Extension page for more details.

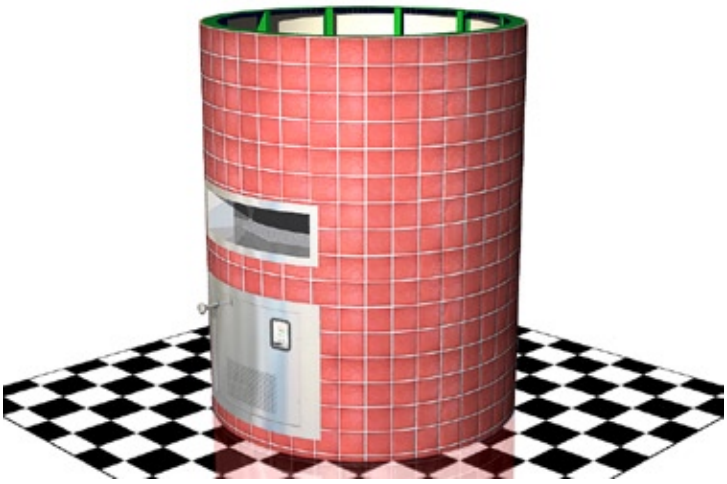

STEP 1. THE BASE OVEN

Figure 1.1 Represents a standard WS-MS-5-RFG-IR oven with our curved doorway facade extension. Specs for the oven are available in our online Product Catalog. CAD Symbols are available in our CAD Library. View more about Facade Extension on our Facade Extension Product Page. Additional Facade Extensions are shown in Figures 1.2-1.4.

Note: It is necessary for the proper operation of our ovens that the Radiant Flame Control Knob be fully accessible after all finishing is completed. Please see the **Radiant Knob Detail** on **page** . This knob controls temperature in our gas oven, if you cannot adjust the knob you cannot adjust the temperature.

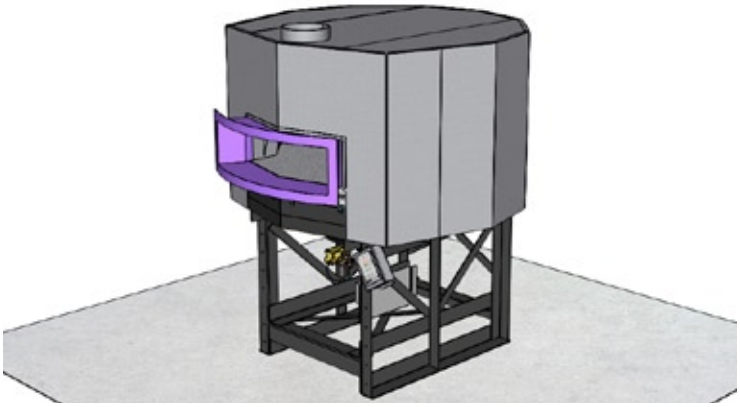

Figure 1.1

ADDITIONAL FACADE EXTENSION OPTIONS

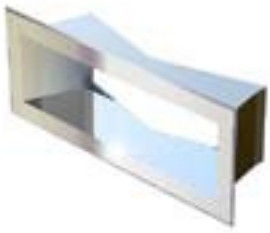

Figure 1.2

Figure 1.3

Figure 1.4

WOOD STONE CORPORATION
1801 W. Bakerview Rd.
Bellingham, WA 98226 USA

Toll Free (800) 988-8103
Tel (360) 650-1111
Fax (360) 650-1166

Info@woodstone-corp.com or visit **www.woodstone-corp.com**

STEP 2. MOUNTING THE LOWER PANEL

Shown in **Figure 2.1** at right is the Curved Lower Panel Extension. You will note that the Lower Panel ships unattached and needs to be mounted on site. The wings of the Panel mount directly to the stand of the oven.

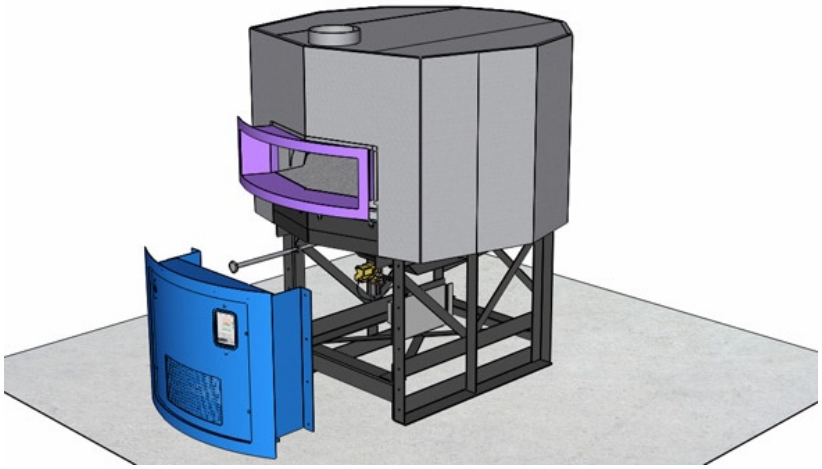

Figure 2.1

In **Figure 2.2**, you can see that the Inner Panel itself is removable from the Extension Frame. It is very important that you maintain this access point as all service to the oven is done through this cut-out.

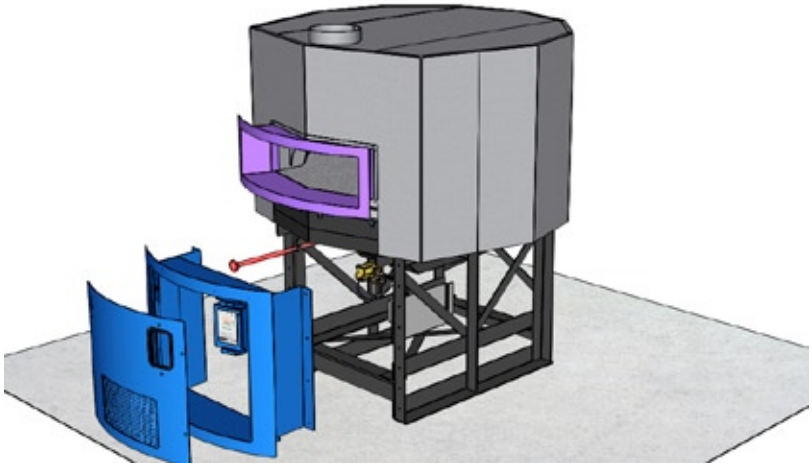

Figure 2.2

WOOD STONE CORPORATION
1801 W. Bakerview Rd.
Bellingham, WA 98226 USA

Toll Free (800) 988-8103
Tel (360) 650-1111
Fax (360) 650-1166

Info@woodstone-corp.com or visit **www.woodstone-corp.com**

In **Figure 2.3**, the Inner Panel is seated into the Extension Frame. In the same figure, please note the Ventilation Grid located in the lower section of the Inner Panel. The Ventilation Grid allows airflow into the under part of the oven to serve as combustion air. It is very important that the airflow not be blocked, as an absence of combustion air will impact the performance of the oven.

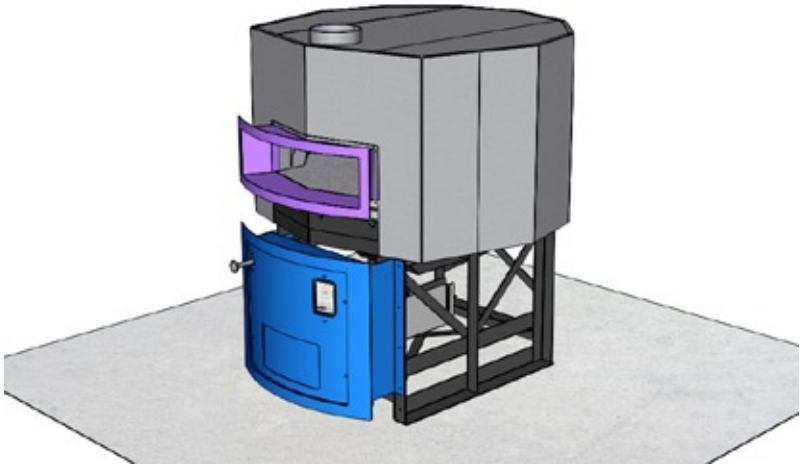

Figure 2.3

STEP 3. STUD WALL

Here the stud wall is built (in green). Metal studs are recommended. Consideration must be given to the wall framing position to insure the minimum one-inch offset from the back of the wall surface (sheetrock) to the oven sheet metal.

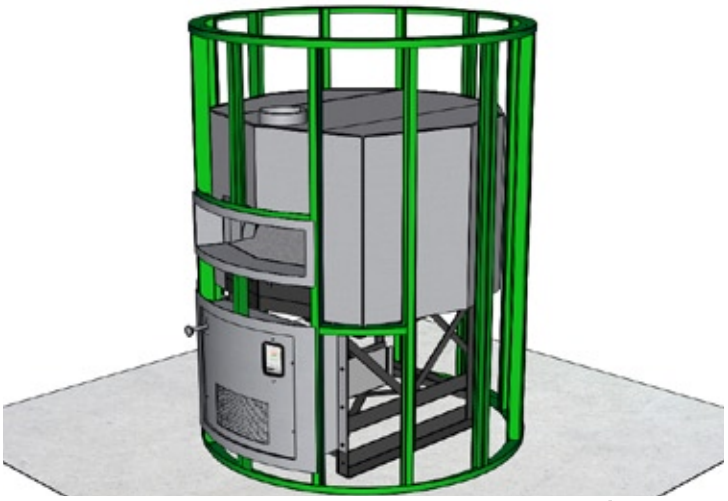

Figure 3.1

WOOD STONE CORPORATION
1801 W. Bakerview Rd.
Bellingham, WA 98226 USA

Toll Free (800) 988-8103
Tel (360) 650-1111
Fax (360) 650-1166

Info@woodstone-corp.com or visit **www.woodstone-corp.com**

Figure 3.2 displays the lower facade extensions hidden, this is just to give a closer detail of the wall, the facade extension will be in place and the wall will actually be built to them.

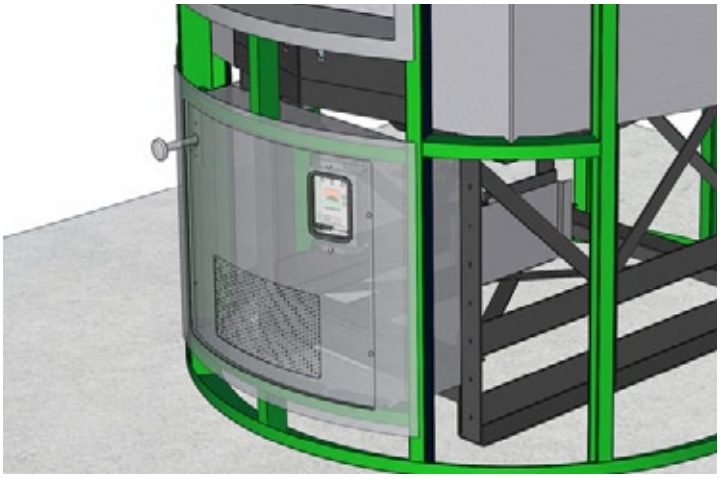

STEP 4. NON-COMBUSTIBLES

Seen here in yellow is the non-combustible wallboard. This is required directly over the oven doorway and 6” on either side of the doorway. For ease of cutting and construction many installers take this non-combustible material all the way to the floor.

Non-combustible material is also required anywhere the facade touches the oven or the mantle. Usually a cement board is used for this application. Brand names of appropriate underlayment include **Wonderboard** and **DUROCK**. (Drywall is considered a combustible and should not be used).

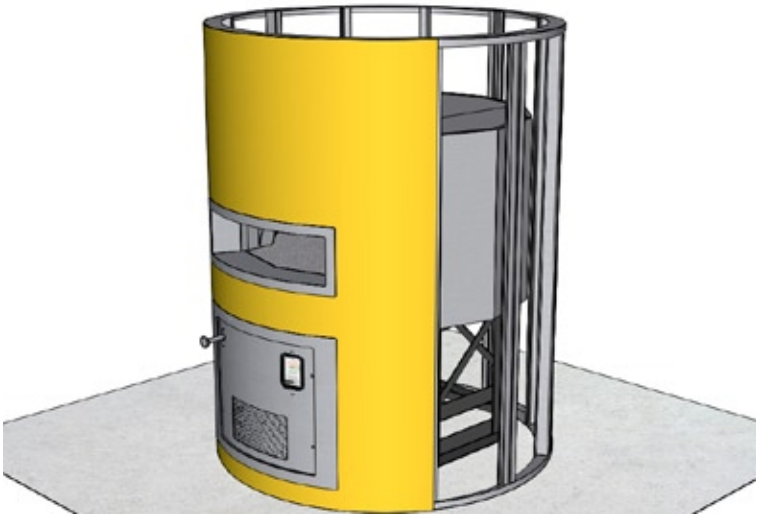

Figure 4.1

WOOD STONE CORPORATION
1801 W. Bakerview Rd.
Bellingham, WA 98226 USA

Toll Free (800) 988-8103
Tel (360) 650-1111
Fax (360) 650-1166

Info@woodstone-corp.com or visit **www.woodstone-corp.com**

STEP 5. ADDING DRYWALL

Shown in white is the drywall applied to the stud wall. These areas do not require non-combustible materials if your 1-inch side clearance to combustibles has been achieved.

For the sake of simplicity of construction, many installers choose to make the entire wall out of the non-combustible cement board mentioned above as to avoid cutting many oddly shaped segments.

Make sure you've covered the Do's and Don'ts of Oven Venting (visit our web site for more information) as it pertains to allowing proper combustion air to the oven.

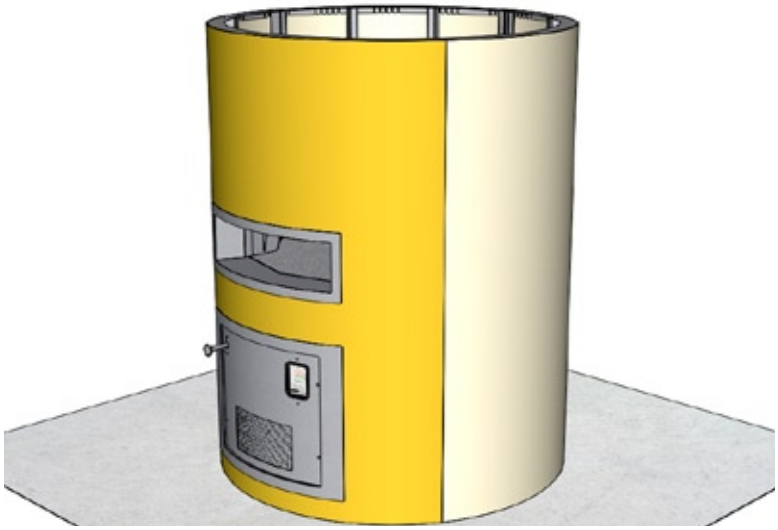

Figure 5.1

STEP 6. FINISHING

The wallboard can be finished with any decorative material that can be easily affixed to the wall surface such as tile, stucco, sheet metal, brick, etc.

Note: It is necessary for the proper operation of our ovens that the Radiant Flame Control Knob be fully accessible after all finishing is completed. Please see the **Radiant Knob Detail**. This knob controls temperature in our gas ovens, if you cannot adjust the knob you cannot adjust the temperature.

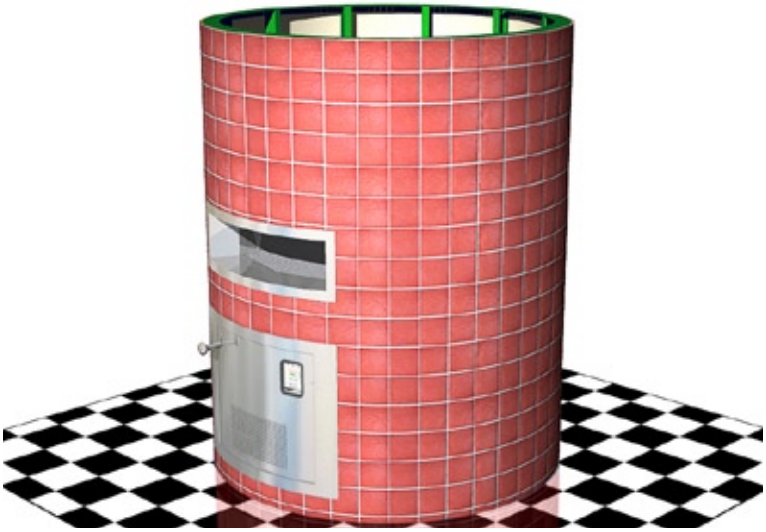

Figure 6.1

GO TO NEXT PAGE FOR MT. SERIES FACADE SPECIAL DETAILS

WOOD STONE CORPORATION
1801 W. Bakerview Rd.
Bellingham, WA 98226 USA

Toll Free (800) 988-8103
Tel (360) 650-1111
Fax (360) 650-1166

Info@woodstone-corp.com or visit **www.woodstone-corp.com**

CYLINDER WALL FACADE SPECIAL DETAILS

RADIANT KNOB DETAIL

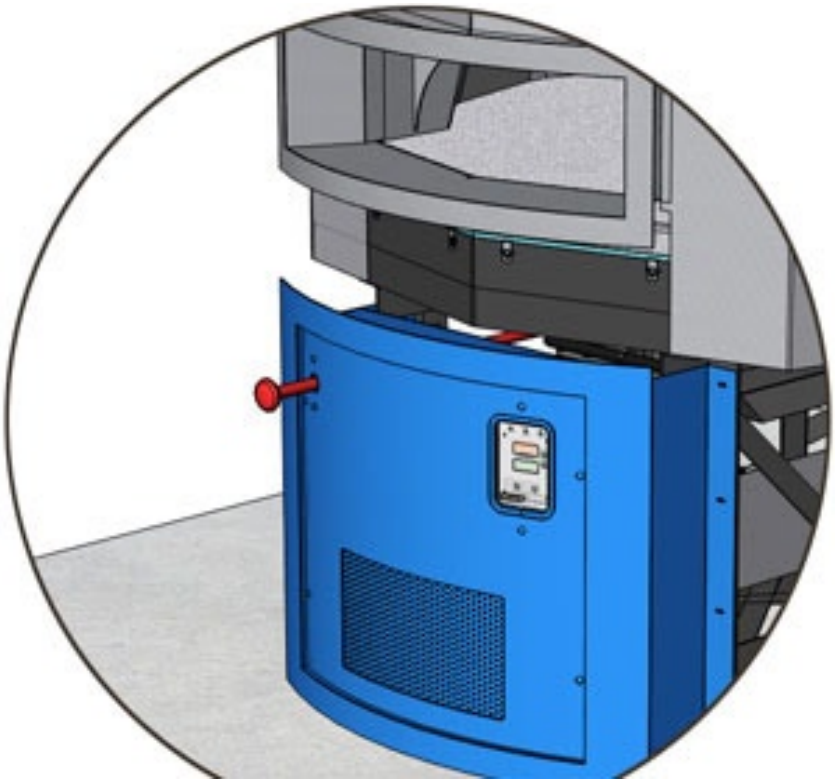

The Control knob for the Radiant Flame inside the oven should always be accessible.

WOOD STONE CORPORATION
1801 W. Bakerview Rd.
Bellingham, WA 98226 USA

Toll Free (800) 988-8103
Tel (360) 650-1111
Fax (360) 650-1166

Info@woodstone-corp.com or visit **www.woodstone-corp.com**